.36 TYP.

.33 TYP.

FOLD LINE (TYP)

Ø .16 TYP.

SPECIFICATIONS

Maximum working water pressure: 175 psi
Maximum working water temperature: 140° F
Hydrostatic test pressure: 350 psi
End connections: NPT per ANSI/ASME B1.20.1

SIZE	FLOWRATE @ 7.5 ft/s (gpm)	RATED FLOW (gpm)
1"	20	50
1-1/2"	48	100
2"	78	160

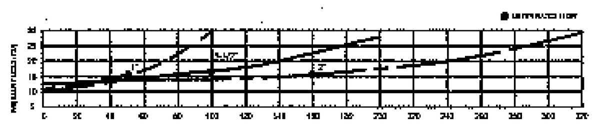

Consult www.apollovalves.com for a complete maintenance manual for this device including repair parts.

⚠ CALIFORNIA PROP 65: WARNING: Cancer and Reproductive Harm - www.P65Warnings.ca.gov.

FOR NON-LEAD FREE VALVES: It is illegal to use this product in the United States for potable water services (water intended for human consumption).

FOR LEAD FREE VALVES: This product complies with U.S. Safe Drinking Water Act (SDWA). Suitable for potable water applications intended for human consumption.

I-9749-00 REV C

12

Apollo® Valves
Made in The USA

INSTALLATION, OPERATION, AND MAINTENANCE INSTRUCTIONS

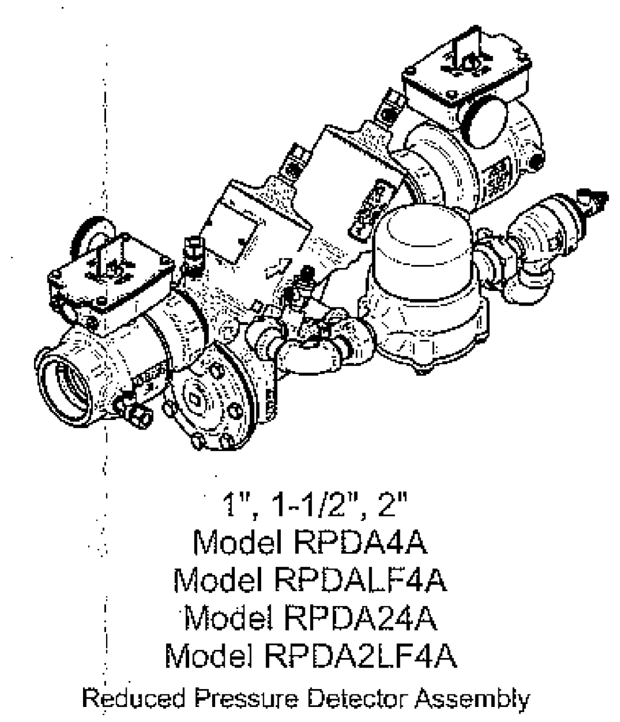

1", 1-1/2", 2"
Model RPDA4A
Model RPDALF4A
Model RPDA24A
Model RPDA2LF4A

Reduced Pressure Detector Assembly

SAVE THESE INSTRUCTIONS

PIECE ONE - FRONT

DESCRIPTION

The Apollo Reduced Pressure Detector Assembly is designed to control cross-connections between potable water lines and substances that are health hazards or non-health hazards. The Model RPDA24A consists of mainline RP with a Type 2 bypass consisting of a single check (SCV) and meter bypassing the mainline second check to prevent backflow while accurately measuring all flows up to 2 gpm with the mainline 2nd check remaining closed. The Model RPDA4A consists of an optional Type 1 bypass consist of an RP and meter which bypasses both mainline checks and accurately meters all flows up to 2 gpm with both mainline checks closed.The mainline RP consists of two independently acting, spring loaded check valves with a diaphragm actuated, spring-loaded relief valve located between the checks. The device is equipped with four test cocks and inlet and outlet shutoff valves. NOTE: ASSE and UL installations must include indicating type shutoff valves.

MAINLINE OPERATION

During normal flow conditions, the two check valves open, supplying water downstream. The relief valve is held closed by supply pressure acting through a sensing passage on the diaphragm. The area between the checks, called the "zone", is maintained at a minimum of 5 psi lower than supply pressure. Should a backpressure or back-siphonage condition occur, the No. 2 check will close to prevent backflow. Should the No. 2 check become fouled during a backpressure or back-siphonage situation, the zone pressure will increase causing the relief valve to open. This will maintain the pressure in the zone at least 2 psi lower than the supply pressure.

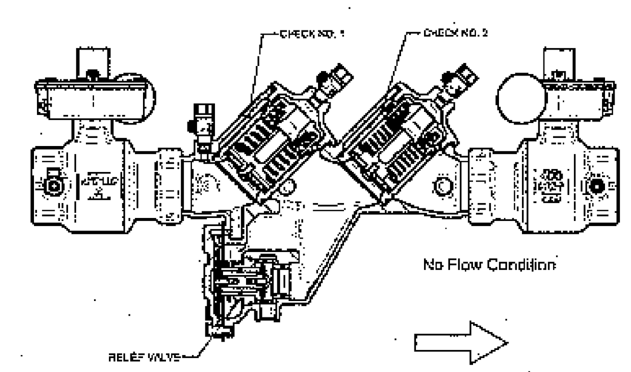

2

TROUBLESHOOTING GUIDE

SYMPTOM	CAUSE	CORRECTIVE ACTION
1. Relief valve continuously discharges during no-flow condition.	a. No. 1 check valve fouled with debris. b. No. 2 check valve fouled with debris coupled with a backpressure condition. c. No. 1 check poppet stem not moving freely in guide (or No. 2 check poppet during a backpressure condition).	a. Inspect and clean seat disc and seat. b. Inspect and clean seat disc and seat. c. Inspect for debris or deposits on poppet stem or guide.
2. Relief valve discharges continuously during flow and no-flow conditions.	a. Relief valve fouled with debris. b. Damaged diaphragm (allows water to pass through from inlet to zone). c. Sensing passage to inlet side of diaphragm plugged. d. No. 1 check poppet stem not moving freely in poppet guide.	a. Inspect and clean relief valve seat disc and seat. b. Replace diaphragm. c. Inspect and clean passage in cover and body. d. Inspect for debris or deposits on poppet stem or guide.
3. Relief valve discharges intermittently in a "spitting" action during no-flow condition.	a. Pressure fluctuations or water hammer from supply.	a. Eliminate or reduce supply pressure fluctuations.
4. Relief valve does not open during test No. 1.	a. No. 2 shut-off valve not closed completely. b. Test equipment improperly installed.	a. Close No. 2 shut-off valve or inspect for possible through leakage. b. Recheck test procedure.
5. No. 2 check valve fails to hold backpressure.	a. No. 2 shut-off valve not closed completely. b. No. 2 check valve fouled with debris. c. No. 2 check poppet stem not moving freely in guide.	a. Close No. 2 shut-off valve or inspect for possible through leakage. b. Inspect and clean seat disc and seat. c. Inspect for debris or deposits on poppet stem or guide.
6. Pressure differential across No. 1 check valve is low during field test No. 3 (does not meet 5 PSID minimum).	a. No. 1 check valve fouled with debris. b. Upstream pressure fluctuations causing inaccurate gauge reading. c. No. 1 check poppet stem not moving freely in guide.	a. Inspect and clean seat disc and seat. b. Eliminate pressure fluctuations. c. Inspect for debris or deposits on poppet stem or guide.

11

PIECE ONE - BACK

MAINTENANCE INSTRUCTIONS (BYPASS CHECK)

A. Disassembly - Check Valve
1. Close both bypass line shut-off valves.
2. Bleed pressure from the bypass line by opening the bypass line test cocks.
3. Unscrew cap using hex head provided.
4. Push down and turn the spring retainer 90 degrees to remove. Remove the spring. Remove the poppet from the check seat.

B. Disassembly - Check Valve Poppet

CAUTION: Do not use pliers or other tools, which may damage or scratch the plastic stem.

1. Holding the poppet assembly in one hand, remove screw and retaining washer.
2. Remove the seat disc.
3. All parts should be carefully inspected for any damage or excessive wear and thoroughly rinsed in clean water prior to reassembly. Replace worn parts as necessary.

C. Assembly - Check Valve Poppet
1. Install new disc in poppet and secure with washer and screw.

D. Assembly - Check Valve
1. If the check seat was removed, install the new O-ring and lubricate with Apollo lubricant, DOW® 111 or equal. Line up seat with the bore and push it firmly into place.
2. Place and center the poppet assembly in the check seat.
3. Install the spring onto the poppet.
4. Install the spring retainer onto the spring by pushing down into the grooves of the check seat and turning 90 degrees.
5. Apply a thin coat of Apollo lubricant, DOW® 111 or equal on cap o-ring.
6. Install cap.

10

INSTALLATION INSTRUCTIONS

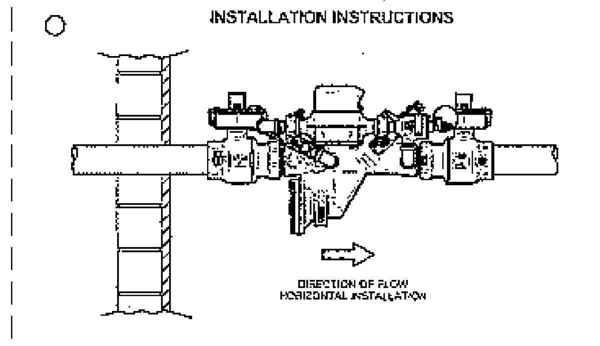

Choose a conveniently accessible location for installing this Reduced Pressure Detector Assembly (RPDA) device. Adequate clearances are recommended to facilitate periodic testing and maintenance. This device must be installed in the horizontal position.

Installing this device in a pit is not recommended. However, if installation in a pit is necessary, there must be adequate drainage within the pit to deter potential accumulation of standing water. Check with local codes and/or inspectors prior to making such installations.

Do not install in areas subject to freezing without using a properly designed backflow enclosure.

As in any piping system, provisions should be made to minimize water hammer and pressure rise due to thermal expansion as these conditions can create damaging and dangerously high internal pressures.

It is common for occasional spillage from the relief valve port to occur during pressure fluctuations or check valve fouling. Therefore, this device must be installed in an area where spillage is not objectionable and can be adequately drained. If a drain line to contain relief valve discharge is used, a mechanical air gap must be provided between the drain and this RPDA. Apollo offers an Air Gap Drain kit for easy attachment to this device.

START UP PROCEDURES

With the device installed, verify that both the inlet and outlet shutoff valves are closed. Pressurize the upstream piping up to the inlet shutoff valve. Slowly open the inlet shutoff valve and pressurize the device. Purge air from the device by opening test cock #4. Open the outlet shut-off valve to allow flow to the system.

3

PIECE TWO - FRONT

(11.00)

FIELD TESTING PROCEDURE

It is important that this device be tested periodically as required by local codes, but at least annually or more as service conditions warrant.

Equipment required: Differential pressure test kit such as Apollo's Model ATK3 (3-valve) or ATK5 (5-valve).

Note: 3-valve testing procedures are shown. For 5-valve procedures, please see Apollo's web site (www.apollovalves.com).

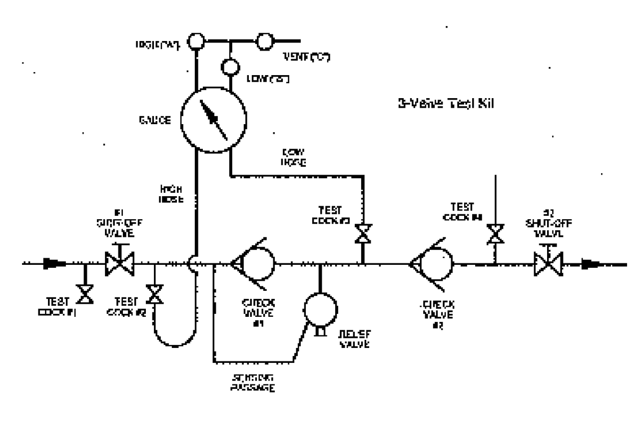

4

(8.50)

E. Disassembly - Relief Valve
1. Remove cover bolts, cover, and diaphragm.
2. Grasp the diaphragm plate and pull the assembly straight out of the body.
3. Holding the relief valve assembly in one hand, remove the screw and retaining washer.
4. Remove the seat disc.
5. Turn the assembly over, keeping the spring compressed by holding down on the diaphragm plate, remove the screw.
6. Remove the diaphragm plate, spring, and bushing from the R.V. stem. Note the orientation of the bushing with respect to the spring.
7. Remove the o-ring from the R.V. stem.
8. Normally, the R.V. seat need not be removed. If removal is required, rock it back and forth while pulling outward.
9. All parts should be carefully inspected for any damage or excessive wear and thoroughly rinsed in clean water prior to reassembly. Replace worn parts as necessary.

F. Assembly - Relief Valve
1. Apply a thin coat of Apollo lubricant, DOW® 111 or equal on o-rings before installing.
2. Install o-ring on R.V. seat. Line up the seat with the bore and push firmly into place.
3. Install o-ring onto R.V. stem.
4. Slide bushing over R.V. stem and position spring onto bushing. Note correct position of the bushing from step #6 in disassembly instructions.
5. Position diaphragm plate and compress spring, install screw into R.V. stem.
6. Turn the assembly over and install seat disc, retaining washer, and screw.
7. Install o-ring onto bushing.
8. Slide complete assembly into the body.
9. Position diaphragm over flange, install cover, and tighten bolts evenly.
10. Open #1 shut-off valve and bleed air out of the unit through #2, #3, and #4 test cocks; then open #2 shut-off valve.
11. Test complete assembly to ensure proper operation.

9

PIECE TWO - BACK

MAINTENANCE INSTRUCTIONS

A. **Disassembly - Check Valves**
1. Close #2 shut-off valve, then close #1 shut-off valve.
2. Bleed pressure from the assembly by opening #2, #3, and #4 test cocks.
3. Unscrew cap using hex head provided.
4. Push down and turn the spring retainer 90 degrees to remove. Remove the spring. Remove the poppet from the check seat.
5. Normally, the check seat need not be removed. If removal is required, rock it back and forth while pulling outward.

B. **Disassembly - Check Valve Poppet**

CAUTION: Do not use pliers or other tools which may damage or scratch the plastic stem.

1. Holding the poppet assembly in one hand, remove screw and retaining washer.
2. Remove the seat disc.
3. All parts should be carefully inspected for any damage or excessive wear and thoroughly rinsed in clean water prior to reassembly. Replace worn parts as necessary.

C. **Assembly - Check Valve Poppet**
1. Install new disc in poppet and secure with washer and screw.

D. **Assembly - Check Valve**
1. If the check seat was removed, install the new o-ring and lubricate with Apollo lubricant, DOW® 111 or equal. Line up seat with the bore and push it firmly into place.
2. Place and center the poppet assembly in the check seat.
3. Install the spring onto the poppet.
4. Install the spring retainer onto the spring by pushing down into the grooves of the check seat and turning 90 degrees, ensure spring retainer pops up about .1" and locks into the lugs.
5. Apply a thin coat of Apollo lubricant, DOW® 111 or equal on cap o-ring.
6. Install cap.

8

FIELD TEST PROCEDURES

RPDA4A and RPDALF4A MODELS
These procedures may be followed for the mainline RP and the bypass RP.

RPDA24A and RPDA2LF4A MODELS
These procedures may be followed for the mainline RP. Instructions for testing the bypass line single check valve are found at the end of these procedures.

TEST NO. 1

PURPOSE:
To test operation of the pressure differential relief valve.

REQUIREMENT:
The pressure differential relief valve must operate to maintain the zone between the two check valves at a minimum of 2 psi less than the supply pressure.

PROCEDURE:
1. Open test cock #4 to establish flow through the RP. Flush test cocks in the following order taking care not to dump the relief valve. Open and close test cock #1, SLOWLY open and close test cock #2. Open and close test cock #3. Close test cock #4. Install appropriate adapters in test cocks.
2. Connect the high ("A") hose to test cock #2. Connect the low ("B") hose to test cock #3. Fully open the vent ("C") valve.
3. Slowly open test cock #2. Bleed the high "A" side through the vent "C" hose by opening the high "A" valve. Close the high "A" valve.
4. Slowly open test cock #3. Bleed the low "B" side through the vent "C" hose by opening the low "B" valve. After the pointer on the gage reaches the upper end of the scale, close the vent "C" and low "B" valves.
5. Close the No. 2 shutoff valve and observe the pressure drop across check valve No. 1. If the pressure drops until the relief valve discharges continuously, check valve No. 1 is leaking and must be cleaned or repaired before continuing.
6. Open the high "A" valve.
7. Open the low "B" valve no more than one-quarter (1/4) turn.
8. Watch the pointer on the gage drop slowly to the opening point of the relief valve and record the reading. If the relief valve does not open, go to step 10.
9. Close the high "A" and low "B" valves on the gage and go to test No. 2.
10. The No. 2 shutoff valve may be leaking. Reopen and close No. 2 shutoff valve to attempt a better shutoff. Repeat steps 6 through 8. If the relief valve does not open, a bypass hose is required.
11. Attach a bypass hose to test cock #1. Bleed hose by opening test cock #1. Close test cock #1.
12. Connect the hose from test cock #1 to test cock #4.
13. Open test cock #1 to pressurize the hose.
14. Slowly open test cock #4. Repeat steps 6 through 8. If the relief valve still does open, the leaky No. 2 shutoff valve must be repaired.

5

PIECE THREE - FRONT

TEST NO. 2

PURPOSE:
Is check valve No. 2 tight against back pressure?

NO BYPASS HOSE USED IN TEST 1
1. Bleed gage vent "C" hose by opening the high "A" and vent "C" valves. Close the vent "C" valve.
2. Attach the vent "C" hose to test cock #4. Open test cock #4.
3. Loosen the low side "B" hose at test cock #3 to re-establish the normal reduced pressure within the "zone". Re-tighten the low "B" hose at test cock #3.
4. Open the vent "C" valve. If the differential pressure stabilizes above the relief valve opening point, check valve No. 2 is recorded as "tight". Proceed to test No. 3. If the reading falls to the relief valve opening point, check valve No. 2 is noted as "leaking" and test No. 3 cannot be completed.

BYPASS HOSE USED IN TEST 1
1. Leave the vent "C" hose connected between test cocks #1 and #4. Leave test cocks #1 and #4 open.
2. Open the low "B" and vent "C" valves allowing the pointer to reach the upper part of the scale.
3. Close the low "B" and vent "C" valves.
4. If the differential pressure stabilizes above the relief valve opening point, check valve No. 2 is recorded as "tight" (proceed to test No. 3). If the reading falls to the relief valve opening point, check valve No. 2 is recorded as "leaking" and test No. 3 cannot be completed.

TEST NO. 3

PURPOSE:
Is the static pressure drop across check valve No. 1 maintained at least 3 psi above the relief valve opening point?

NO BYPASS HOSE USED IN TESTS 1 AND 2
1. Close the high "A" and vent "C" valves. Close test cock #4 and disconnect gage bypass hose.
2. Open the low "B" and vent "C" valves allowing the pointer to reach the upper end of the scale. Close the low "B" and vent "C" valves.
3. Allow the gage reading to stabilize. Record this reading as the static pressure drop across check valve No. 1.

BYPASS HOSE USED IN TESTS 1 AND 2
1. Open the low "B" and vent "C" valves allowing the pointer to reach the upper end of the scale. Close the low "B" and vent "C" valves.
2. Allow the gage reading to stabilize. Record this reading as the static pressure drop across check valve No. 1.

6

BYPASS CHECK VALVE TEST (RPDA24A & RPDA2LF4A MODELS ONLY)

PURPOSE: To determine the static pressure drop across the bypass line single check valve.

REQUIREMENT: The static pressure drop across the bypass single check valve must be 1.0 psid minimum.

PROCEDURE:

1. Identify test cocks #1 and #2 on the bypass line. Bypass line shutoff valves should be open.
2. Connect the high ("A") hose to test cock #1. Connect the low ("B") hose to test cock #2. Fully open the vent ("C") valve.
3. Slowly open test cock #1. Bleed the high "A" side through the vent "C" hose by opening the high "A" valve. Close the high "A" valve.
4. Slowly open test cock #2. Bleed the low "B" side through the vent "C" hose by opening the low "B" valve. After the pointer on the gage reaches the upper end of the scale, close the vent "C" and low "B" valves.
5. Close the No. 2 bypass line shutoff valve and observe the pressure drop across the single check valve. If the value is less than 1.0 psid, the check valve must be cleaned or replaced.
6. Open the No. 2 bypass line shutoff valve.

WRAP UP: CLOSE ALL TEST COCKS. OPEN MAINLINE NO. 2 SHUTOFF. DRAIN GAGE.

7

PIECE THREE - BACK

NOTES:
1. USE FRONT AND BACK OF (3) 8.5" X 11" SHEETS.
2. ALL TEXT TO BE TYPE SET USING ARIAL FONT.
3. MATERIAL TO BE .010 THICK LIGHT BLUE CARDSTOCK WITH BLACK PRINT.
4. STAPLE ON FOLD LINE AND FOLD.

REV.	CHANGE DESCRIPTION	ECN NO.	BY	DATE
C	UPDATED PROP 65 WARNING LABEL	M16975	DRP	05/25/18
B	UPDATED FLOW CURVES AND REVISION LEVEL	M14356	JCH	4/29/14
A	RELEASE NEW DRAWING	M14239	JCH	2/27/14

NOTE: This drawing and the subject matter disclosed therein is the property of Conbraco Industries, Inc. and is not to be copied, used, appropriated or disclosed to others without the expressed written permission of Conbraco Industries, Inc.

"Apollo®" Valves

NAME: BOOKLET,INSTALLATION INSTRUCTIONS, 1" - 2",RPDA,4A SERIES

MAT'L: NOTED

UNSPECIFIED TOLERANCES:
RADIUS = .03 MAX.
BREAK SHARP EDGES .005 - .015
MACH. FINISH = 125 Ra
ALL DIMENSIONS ARE IN INCHES, UNLESS OTHERWISE NOTED.
Decimal: .X = ±.03, .XX = ±.015, .XXX = ±.005, ANGULAR: ±1/2°

EXP. NO.	SCALE:	DRN:	DATE:	CHKD:	APPD:	NO.	REV.
	1:1	JCH	2/26/14	WGH	GDG	I-9749-00	C